BARATZA

Parts List & Exploded View

SETTE MAIN ASSEMBLY

Sette 270

Sette 270Wi

Sette 30

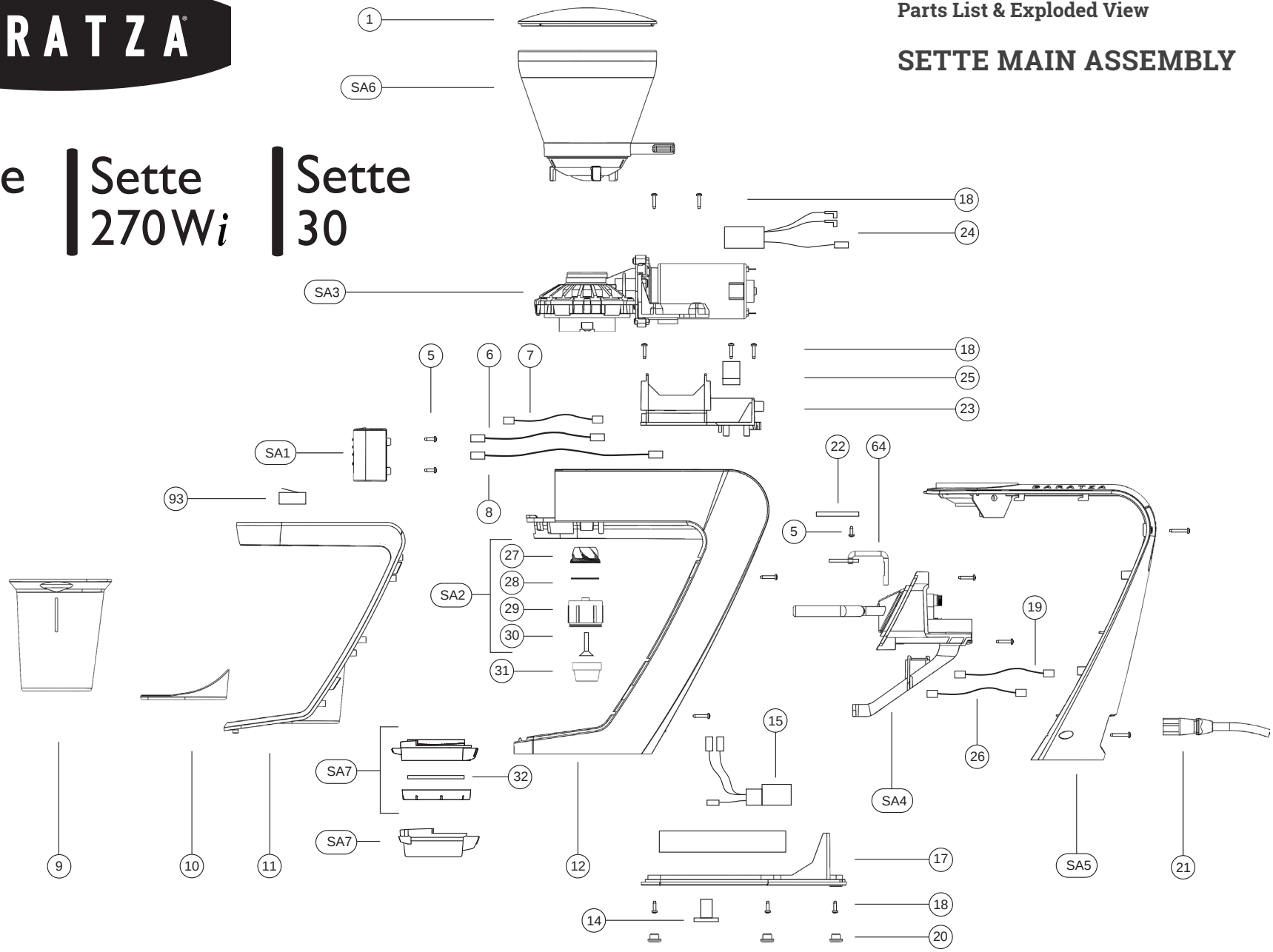

270, 270W*i* & 30 MAIN ASSEMBLY

Item #	Part #	Part Description	Total Used
1	1010**	Hopper Lid Clear	1
SA6	S012**	Sette 270/270Wi Hopper Assembly (w/ Metal Shut Off Handle)	1
SA6	S014*	Sette 30 Hopper Assembly (w/ Plastic Shut Off Handle)	1
SA3	S056*	Sette Gear Box/Motor/Ring Burr Assy (110V)	1
SA3	S057*	Sette Gear Box/Motor/Ring Burr Assy (220V)	1
SA1	S075*	Display Assembly Sette 270	1
SA1	S077*	Display Assembly Sette 30	1
SA1	S078*	Display Assembly Sette 270Wi	1
5	FS533*	M3x12 Thread Rolling Screw	2
6	S097	Wire from Display to Power Board (Black, Red, Blue, White)	1
7	S098	Wire from Microswitches to Power Board (Black, White, Brown)	1
8	S102	Ground Wire from Display to Ballast (270Wi ONLY)	1
8	S103	Molex Ground Wire from Display to Ballast (Sette 30 & 270 ONLY)	1
9	S160*	Sette Grounds Bin	1
10	S161*	Sette Dust Tray	1
11	S036	Front Case (Silver)	1
12	S023	Sette Chassis (International Only)	1
12	S024	Sette Chassis V0 (US/Canada Only)	1
27	S071	Sette S1 Cone Burr	1
28	S904*	0.3mm Cone Burr Shim (If Installed)	1
29	S520*	Sette Cone Burr Holder (Standard 6 Fin)	1
29	S584	Sette Cone Burr Holder (3 Fin)	1
30	FS521*	M8 1.25x30 Countersunk Machine Screw	1
SA2	S068*	Sette S1 Cone Burr w/Burr Holder & Screw Assy (S520, FS521, S071)	1
SA2	S067*	Sette S2 Cone Burr w/Burr Holder & Screw Assy (S520, FS521, S072, S904)	1
31	S522*	Sette Nozzle	1
SA7	S070*	Adjustment Assembly Sette 30	1
SA7	S069*	Adjustment Assembly Sette 270 & 270Wi	1
32	S582**	Felt for Sette 270 270Wi Adjustment Ring 7.5mm (“Felt Noodle”)	1
14	F6122*	M6-1.25x8 Machine Screw	3
15	S099	Power Cord Plug Connector with Ground Wire and Power Molex	1
SA4	S351	Sette 270 Convertible Device Holder	1
SA4	S085	Sette 270Wi Convertible Device Holder & Load Cell Assy (w/Circuit Board)	1
NS	S585*	Sette 30 Arm 90° (Right & Left)	1
NS	S587	Sette 30 Arm Bracket 90° Adjust	1
17	S321	Sette Base	1

270, 270W*i* & 30 MAIN ASSEMBLY

Item #	Part #	Part Description	Total Used
18	F6121*	M3.5x11 Plastic Thread Cutting Screw	28
19	S101	Load cell to Ballast Ground Wire (Short) (270Wi only)	1
20	6049**	Rubber Foot	5
SA5	S035*	Top/Back Case (Black) (International Only)	1
SA5	S712*	Top/Back Case (Black) (US/Canada Only)	1
21	S300*	Standard Power Cord	1
21	S301*	Euro Power Cord (Plug F)	1
21	S302*	Power Cord UK (G)	1
21	S303*	Power Cord (I)	1
21	S304*	Power Cord Japan (JET)	1
21	S305*	Power Cord (L)	1
21	S306*	Power Cord (M)	1
21	S307*	Power Cord (N)	1
21	S308*	Power Cord Korea	1
22	S060*	Sette Power Board (110V) Sette30/270 (Japan and Taiwan only)	1
22	S061*	Sette Power Board (230V) (Sette 30, 270, 270W)	1
22	S062*	Sette Power Board (230V) Sette 270Wi International ONLY	1
22	S065*	Sette Power Board (110V) (US – Sette 270Wi/30/270); (Japan & Taiwan – 270Wi only)	1
23	S091	Sette Power Board Mounting Bracket (Not For Sale)	1
NS	F6177*	M2x6 Self Tapping Screw	2
24	S028	Sette Cable/Capacitor Assy — Motor to PCB (110V)	1
24	S029	Sette Cable/Capacitor Assy — Motor to PCB (230V)	1
25	S589	Sette Capacitor Bracket	1
26	S100*	Wire from Load Cell Board to Power Board (270Wi ONLY)	1
NS	S605	Sette 270Wi Load Cell (w/Acaia PCB) (Part of S085)	1
93	S032*	Micro Switch Long Foot	1
64	S548	Portafilter Hook (Normal) (Stock Part)	1
64	S583	Sette Porta Holder Hook (Long) - For small portafilters (Accessory)	1
NS	S063**	Fuse 110 Volt (T3.15A)	1
NS	S064**	Fuse 230 Volt (T2.0A)	1
NS	S570*	Arm Sleeve Right	1
NS	S571*	Arm Sleeve Left	1

** Frequently needed service parts

* Occasionally needed service parts

NS (Not Shown)

BARATZA

Sette 270 | Sette 270Wi | Sette 30

Parts List & Exploded View

MOTOR/GEARBOX ASSEMBLY (SA3)

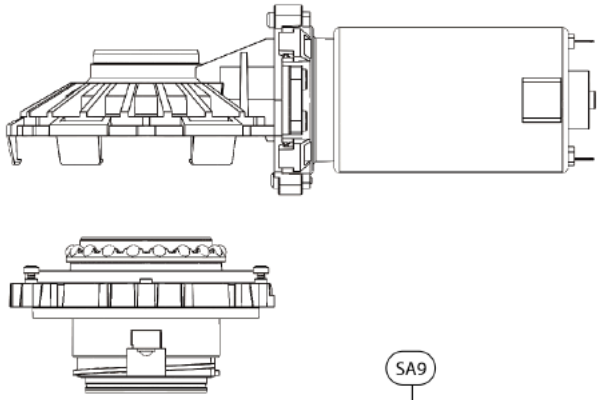

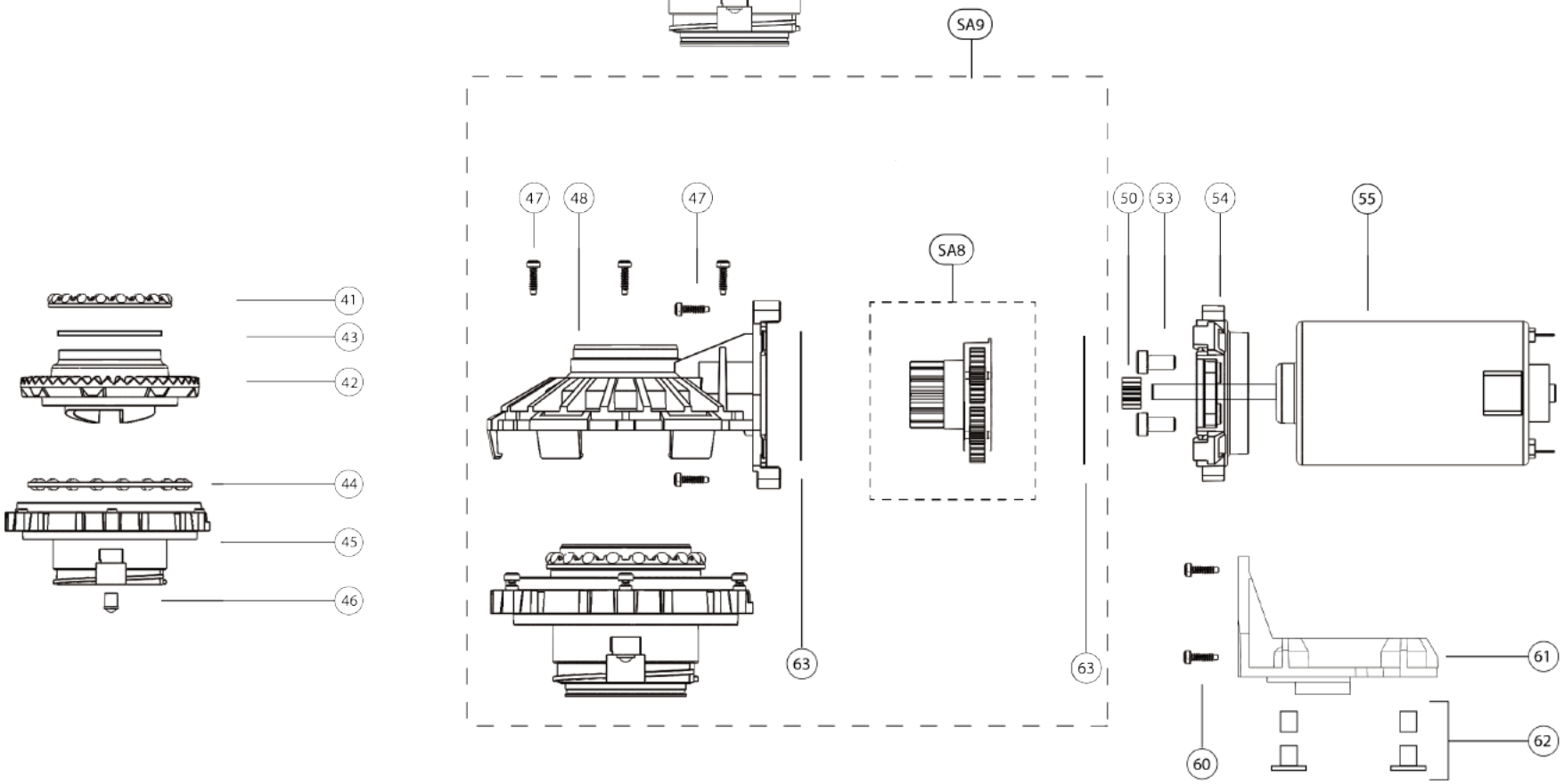

270, 270W*i* & 30 MOTOR/GEARBOX ASSEMBLY (SA3)

Item #	Part #	Part Description	Total Used
SA3A	S056*	Sette Gear Box/Motor/Ring Burr Assy (110V)	1
SA3B	S057*	Sette Gear Box/Motor/Ring Burr Assy (220V)	1
SA9	S913**	Sette Gearbox Kit (S527, S528, S529, S530, S531, FS533, 1354, S713, S914, S581, S532) (Part of S056/ S057)	1
41	S527	Top Ball Cage (With Steel Balls) ‡	1
42	S528	Crown Gear W/Ring Burr ‡	1
43	S529	Felt Gasket (For Installation into the Crown Gear, All Models) ‡	1
44	S530	Bottom Ball Cage (With Steel Balls) ‡	1
45	S531	Bottom Gear Box Case ‡	1
46	1354*	Detent Ball	2
47	FS533*	M3x12 Thread Rolling Screw	8
48	S532	Top Gear Box Case ‡	1
50	N/A	Sun Gear (Comes With Motor) ‡	1
53	FS536	M5x10 Pan Head Machine Screw (4) ‡	4
54	S537	Sette Motor Mounting Plate ‡	1
55A	S538	Motor Dct-M-004-D (DJ 100-120V) w/ Sun Gear (Part Of S056)	1
55B	S539	Motor Dct-M-005-D (DJ 200-240V) w/ Sun Gear (Part Of S057)	1
SA8	S581	Planet Carrier Assembly	1
63	S713	Washer 0.25 id, 0.40 od, 0.10mm Thick (Used in S913)	2
60	F8029*	M3x12 Machine Screw (4)	4
61	S544	Gearbox H-bracket Chassis Mount ‡	1
62	6105	Grommet Sleeve Assembly	4

** Frequently needed service parts

* Occasionally needed service parts

‡ Not Sold Separately

Parts List & Exploded View

ARM ASSEMBLY AND LOAD CELL ASSEMBLY (SA4)

Sette 270 | Sette 270Wi | Sette 30

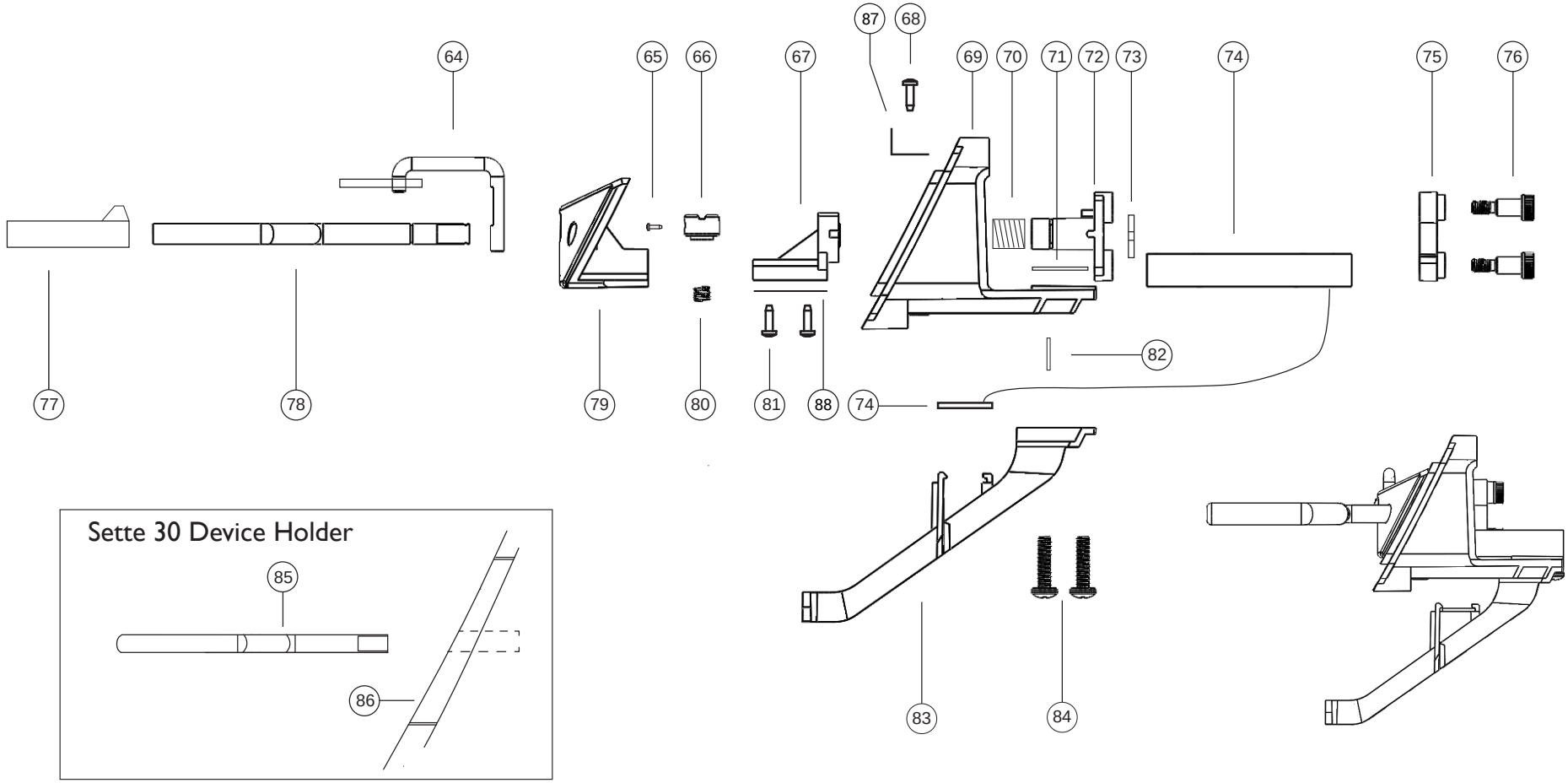

ARM ASSEMBLY AND LOAD CELL ASSEMBLY (SA4)

Item #	Part #	Part Description	Total Used
SA4	S351	Sette 270 Convertible Device Holder	1
SA4	S085	Sette 270Wi Convertible Device Holder & Load Cell Assy (with Circuit Board)	1
85	S585*	Sette 30 Arm 90° (Right and Left)	2
86	S587	Sette 30 Arm Bracket 90° Adjust	1
64	S548	Portafilter Hook (Normal) (Stock Part)	1
64	S583	Sette Porta Holder Hook (Long) - For Small Portafilters (Accessory)	1
65	FS706*	M4x4 Flat Tip Set Screw	1
87	S592	L Bracket for Hook Cylinder	1
66	S549*	Hook Cylinder (Requires FS706 and S574)	1
67	S550	Rotation Bracket ‡	1
68	FS551	M4x12 Machine Screw ‡	1
69	S552	Perimeter Mounting Bracket Painted 270 ‡	1
69	S553	Perimeter Mounting Bracket Plated 270Wi ‡	1
70	S554	Arm Spring WC80 ‡	1
71	S577	Rectangular Load Cell Spacer (270/Wi)	1 (270) 2 (270Wi)
72	S555	Right Porta Holder Arm Index Ring ‡	1
72	S556	Left Porta Holder Arm Index Ring ‡	1
73	FS590	M7 External Snap Ring (Circlip)	2
74	S605	Sette 270Wi Load Cell (w/Acaia PCB) (Part of S085)	1
74	S558	Dummy Load Cell (Sette 270) ‡	1
75	S559	Connecting Arm ‡	1
76	FS560	M4x20 Shoulder Bolt ‡	2
77	S571*	Arm Sleeve Left	1
77	S570*	Arm Sleeve Right	1
78	S572	Portafilter Arm ‡	2
79	S573	Portafilter Bracket 270 Plastic ‡	1
79	S561	Portafilter Bracket 270Wi Aluminum ‡	1
80	S574*	Hook Cylinder Spring	1
81	F6121*	M3.5x11 Plastic Thread Cutting Screw	4
82	FS576	M7 E Clip	1
83	S578	Support Bracket ‡	1
84	FS579	M5x20 Machine Screw ‡	2
88	S562	Dummy Load Cell Strap (Sette 270 ONLY) ‡	1

** Frequently needed service parts

* Occasionally needed service parts

‡ Not Sold Separately